JEFFREY FETTE
Construction Official

Cynthia Petersen
Technical Assistant

(201) 391-5732
Fax: (201) 391-1312

BOROUGH OF MONTVALE
Building Department – Code Enforcement
12 Mercedes Drive, Montvale, NJ 07645
www.montvale.org

POOLS

Required Information
(3 copies)

BROCHURE FOR:
- POOL
- PUMP
- FILTER
- FENCE
- HEATER – FUEL SOURCE

TOPOGRAPHICAL SURVEY WITH LOCATION OF THE POOL, FENCE, PUMP, FILTER, HEATER, PATIO AND DECK

STRUCTURAL POOL PLANS AND DIAGRAM FOR ELECTRIC

PLANS AND DETAILS FOR FENCING AND GATE

IMPERVIOUS COVERAGE CALCULATIONS – SEE ZONING PERMIT

COMPLETED AND SIGNED FORMS FOR FENCING REGULATIONS, CSST FORM, AND SWIMMING POOL PROCEDURES

COMPLETED AND SIGNED PERMIT APPLICATION BY THE GENERAL CONTRACTOR AND ALL SUBCODES

JEFFREY FETTE
Construction Official

Cynthia Petersen
Technical Assistant

(201) 391-5732
Fax: (201) 391-1312

BOROUGH OF MONTVALE
Building Department – Code Enforcement
12 Mercedes Drive, Montvale, NJ 07645
www.montvale.org

RESIDENTIAL ABOVE GROUND AND IN-GROUND POOL REQUIREMENTS

Indicate on SURVEY where the pool is to be located "to scale"

Indicate all coping and proposed concrete / pavers "to scale" on the survey

Include specifications on above ground pool (from pool company), pump, filter and heater information

All pools must include Engineer's sealed drawings, topographical survey with grade calculations, location and specifications of pump, filter and heater

PLAN REVIEW CHECK LIST FOR SWIMMING POOLS

1. Provide electrical plan and include bonding and grounding details and wire size as well as location of GFCI devices, switches, receptacles, lighting fixtures, etc
2. Detail of pump motor connection
3. Detail of underground circuit includes burial depth and materials
4. Size of pool and type of construction, seal by a professional engineer
5. Show existing and proposed grades and location of any retaining walls, their height and type of construction
6. Show location of pump, filter, heater and tank
7. If pool is heated – type of cover (required by Energy Code)
8. Show distances from property lines, house, septic tank and field or pits
9. Show location of fence and type of construction. Show gates and direction of swing
10. Show location and size of patio, pavers, or deck to be constructed
11. Details for diving board
12. Calculations for impervious coverage

JEFFREY FETTE
Construction Official

Cynthia Petersen
Technical Assistant

(201) 391-5732
Fax: (201) 391-1312

BOROUGH OF MONTVALE
Building Department – Code Enforcement
12 Mercedes Drive, Montvale, NJ 07645
www.montvale.org

PLUMBING CODE COMPLIANCE SUMMARY REQUIRED FOR ALL POOLS

1. Pool heaters shall have a temperature relief valve per IRC 2009 M2006

2. Provide a diagram of this gas line showing the materials to be used, lengths and size for each section.

3. The gas pipe diameter shall be taken from the I.F.G.C. 2009 table 402.4(1) (if sch 40 metallic), table 402.4(30) for csst, table 402.4(33) for pe. Manufactures sizing tables are also acceptable.

4. The gas line shall run from the pool heater directly to a 1.25" minimum tee at the gas meter, if the meter serves other gas loads.

5. If gas line does not connect at the meter, provide sizing calculations for the entire gas service system (old and new) by "Longest Length Method" or other approved method.

6. The meter and / or gas service may have to be upgraded per the gas utility provider requirements.

7. If pool has bottom drains, then:
   a) Include a Plumbing Subcode technical section with pool in item "other". Pool contractor as exempt applicant is ok.
   b) Provide schematic diagram of pump circulation lines.
   c) Clearly show separation of bottom drains.
   d) Provide documentation of code compliant drain covers.

JEFFREY FETTE
Construction Official

Cynthia Petersen
Technical Assistant

(201) 391-5732
Fax: (201) 391-1312

BOROUGH OF MONTVALE
Building Department – Code Enforcement
12 Mercedes Drive, Montvale, NJ 07645
www.montvale.org

CORRUGATED STAINLESS STEEL TUBING (CSST)

When installing **CSST** piping, an **ELECTRICAL SUB-CODE** must be submitted for Bonding.

Block_____ Lot_____ Permit #_____

Work Site Address_____

Contractor_____

I will be using CCST_____ Name_____

Signature_____

Date_____

I will not be using CCST_____ Name_____

Signature_____

Date_____

JEFFREY FETTE
Construction Official

Cynthia Petersen
Technical Assistant

(201) 391-5732
Fax: (201) 391-1312

BOROUGH OF MONTVALE

Building Department – Code Enforcement
12 Mercedes Drive, Montvale, NJ 07645
www.montvale.org

Block_____ Lot_____ Permit #_____

Work Site Address_____

FENCE CERTIFICATION

1. I aware that a fence is required on any swimming pool over 24 inches deep.
2. I understand that the permanent code compliant fence must be installed prior to filling the pool.
3. I understand that the pool may **NOT** be used until I have obtained a Certificate of Occupancy from the building department.

I have read and understand the required fence procedures and certificate requirements for above ground and in-ground pools. I understand failure to comply will result in the issuance of violations and fines in the amount of **$2000** or more in accordance with N.J.A.C. 5:23-2.24

Contractor signature	Homeowner signature
Printed name of Contractor	Printed name of Homeowner
Company name	Homeowner address
Date	Date

680.2 **Permanent Installed Swimming Pool**

Those that are constructed in the ground or partially in the ground, and all other capable of holding water in a depth greater than 42 inches.

680.7 (A) **Length:** for other than storable pools, the flexible cord shall not exceed **3 feet in length.**

680.21 **Motors**

(A) **Wiring Methods –** (1) General: The branch circuits for Pool-associated motors shall be installed in rigid metal conduit, intermediate metal conduit, rigid polyvinyl conduit (PVC).

(4) **One Family Dwellings**. In the interior of dwelling units, any wiring methods recognized in Chapter 3 of this Code that comply with the provisions of this section shall be permitted. Where run in a cable assembly, the equipment grounding conductor shall be permitted to be uninsulated, but it shall be enclosed within the outer sheath of cable assembly.

(c) **GFCI Protection.** Outlets supplying pool pump motors connected to a single phase, 120 volt branch circuit, whether by receptacle or by direct connection, shall be provided with ground-fault circuit-interrupter protection.

680.22 (A) **Receptacles**

(1) **Circulation and Sanitation Systems, Location**. Receptacles that provide power for water-pump motors or other loads directly related to the circulation and sanitation system, not less than 6-feet from inside walls of the pool if they meet all of the following conditions:

1. Consist of single receptacles
2. Employ a locking configuration
3. Are of the grounding type
4. Have GFCI protection.

680.23 (F) (2) Non-GFCI Conductors cannot be in same conduit.

680.25 (A) (2) Aluminum Conduit shall not be permitted in the pool area where subject to corrosion.

690.26 **Equipotential Bonding**

(A) **Performance:** the equipotential bonding required by this section shall be installed **to reduce voltage gradients in the pool area.**

(B) **Bonded Parts** shall be bonded together using solid copper conductors, insulated, covered, or bare, not smaller than #8 AWG.

(1) **Conductive Pool Shells**

(a) Structural reinforcing steel shall be bonded together by steel tie wires or equivalent.

(2) **Perimeter Surfaces** shall extend for 3' horizontally beyond the inside walls of the pool.
A single, bare, sold #8 AWG can be installed around the pool's perimeter in an area measuring between 18" and 24" from the inside pool walls. Where buried, the bonding conductor is to be not less than 4" and not more than 6" below the surface level. The perimeter surface bonding has to be connected at (4) evenly spaced points.

(3) **Metal Components**: all metal parts of the pool structure.

(4) **Underwater Lighting**: all metal forming shells and mounting brackets of no-niches luminaires shall b bonded.

(5) **Metal Fittings:** all metal fittings within or attached to the pool structure.

(6) **Electrical Equipment:** Metal parts of electrical equipment associated with the pool water circulating system; including pump motors and metal parts of equipment associated with pool covers, including electric motors, shall be bonded.

(7) **Fixed Metal Parts**: All fixed metal parts shall be bonded. Metal piping, metal awnings, metal fences, metal door and window frames within 5-feet.

(C) **Pool Water:** where none of the bonded parts is in direct connection with the pool water.

Equipotential Bonding of Permanently Installed Swimming Pools

The requirements for bonding and grounding permanently installed indoor and outdoor swimming pools are provided in Article 680 "Swimming Pools, Fountains and Similar Installations" of the 2005 Edition of the National Electrical Code (NEC®).

What is Equipotential Bonding?

Article 680.26 details the bonding requirements for permanently installed swimming pools in order to "eliminate voltage gradients in the pool area as prescribed." Bonding the metallic parts in and around the pool area prevents differences of potential from developing in the event of an electrical equipment fault and reduces the possibility of electric shock. The area created by bonding the metallic parts together is known as an equipotential plane.

The NEC requires bonding all of the following metallic parts in a permanently installed swimming pool with a #8 AWG solid or larger conductor.

- **Concrete reinforcing steel and all metallic structural components.** Uncoated reinforcing steel and all other metallic structures.
- **Underwater lighting.** All metallic parts (housings and mounting brackets).
- **Metal fittings.** Metal fittings for pipes, drains and water inlets.
- **Electrical equipment.** All metal parts of any electrical equipment associated with the pool including pumps and recirculating equipment, heaters and blowers and automatic covers.
- **Metallic tubing and conduit, metal-sheathed cable, metal piping and all fixed metal parts.** In addition to metal wiring methods and equipment, any component within 5' horizontally and 12' vertically from the water must be bonded.

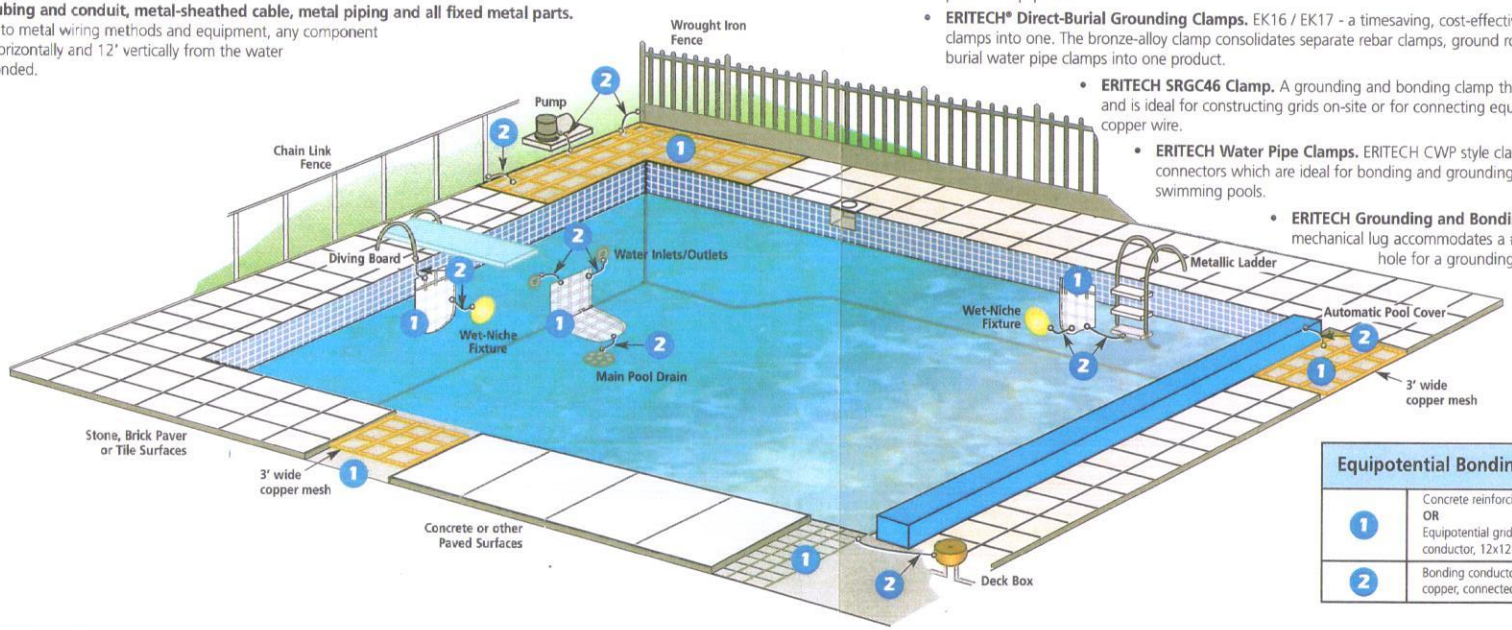

Equipotential Bonding	
1	Concrete reinforcing steel per NEC 680.26 (B)(1) **OR** Equipotential grid, #8 AWG or larger solid copper conductor, 12x12 spacing per NEC 680.26(C)(3)
2	Bonding conductor, #8 AWG or larger solid copper, connected per NEC 250.8

Equipotential Bonding Grid

All of the bonded parts in or around the swimming pool must be attached to an equipotential bonding grid. This grid must extend 3' beyond the inside surface of the pool under concrete, stone or other paved walking surfaces. This grid can consist of the following:

- **Reinforcing Steel.** Uncoated reinforcing steel of a concrete pool (poured or sprayed, with painted or plaster coatings) can be used as the equipotential bonding grid.
- **Copper Grid.** A grid constructed with a minimum of #8 AWG bare solid copper conductors with 12" x 12" spacing.

Pools made of non-conductive materials (fiberglass composite, vinyl lined polymer or other non-conductive materials) do not require an equipotential grid that covers the full contour of the bottom and sides of the pool, however an equipotential grid is still required around the perimeter of the pool extending 3' beyond the sides of the pool.

EQUIPOTENTIAL BONDING SOLUTIONS FROM ERICO® INCLUDE THE FOLLOWING:

- **ERITECH® Prefabricated Mesh.** Convenient, efficient and economical for equipotential bonding grids. Prefabricated mesh is constructed with #8 AWG solid copper conductor with 12" x 12" spacing and is available in 3' x 100' rolls and other convenient sizes.
- **CADWELD® Welded Electrical Connections.** For connecting the bonding conductor to rebar and to the copper grid. CADWELD provides a permanent, low-resistance connection needed to create a long-lasting, reliable bonding network. CADWELD connections will not deteriorate with age, cannot loosen and are made with inexpensive, lightweight and portable equipment.
- **ERITECH® Direct-Burial Grounding Clamps.** EK16 / EK17 - a timesaving, cost-effective, versatile product that combines four clamps into one. The bronze-alloy clamp consolidates separate rebar clamps, ground rod clamps, water pipe clamps and direct-burial water pipe clamps into one product.
- **ERITECH SRGC46 Clamp.** A grounding and bonding clamp that is UL® listed for direct burial in concrete and is ideal for constructing grids on-site or for connecting equipotential bonding mesh to #8 AWG copper wire.
- **ERITECH Water Pipe Clamps.** ERITECH CWP style clamps are UL-listed mechanical connectors which are ideal for bonding and grounding the metallic pipes and conduit of swimming pools.
- **ERITECH Grounding and Bonding Lug.** The EL4 bronze single hole mechanical lug accommodates a #8 AWG solid conductor and has a 1/4" hole for a grounding stud.

Appendix G - Swimming Pools, Spas and Hot Tubs

SECTION AG101
GENERAL

AG101.1 General. The provisions of this appendix shall control the design and construction of swimming pools, spas and hot tubs installed in or on the *lot* of a one- or two-family dwelling.

AG101.2 Pools in flood hazard areas. Pools that are located in flood hazard areas established by Table R301.2(1), including above-ground pools, on-ground pools and in-ground pools that involve placement of fill, shall comply with Sections AG101.2.1 or AG101.2.2.

Exception: Pools located in riverine flood hazard areas which are outside of designated floodways.

> **AG101.2.1 Pools located in designated floodways.** Where pools are located in designated floodways, documentation shall be submitted to the *building official*, which demonstrates that the construction of the pool will not increase the design flood elevation at any point within the *jurisdiction*.
>
> **AG101.2.2 Pools located where floodways have not been designated.** Where pools are located where design flood elevations are specified but floodways have not been designated, the applicant shall provide a floodway analysis that demonstrates that the proposed pool will not increase the design flood elevation more than 1 foot (305 mm) at any point within the *jurisdiction*.

SECTION AG102
DEFINITIONS

AG102.1 General. For the purposes of these requirements, the terms used shall be defined as follows and as set forth in Chapter 2.

ABOVE-GROUND/ON-GROUND POOL. See "Swimming pool.

BARRIER. A fence, wall, building wall or combination thereof which completely surrounds the swimming pool and obstructs access to the swimming pool.

HOT TUB. See "Swimming pool.

IN-GROUND POOL. See "Swimming pool.

RESIDENTIAL. That which is situated on the premises of a detached one- or two-family dwelling or a one-family *townhouse* not more than three stories in height.

SPA, NONPORTABLE. See "Swimming pool.

SPA, PORTABLE. A nonpermanent structure intended for recreational bathing, in which all controls, water-heating and water-circulating *equipment* are an integral part of the product.

SWIMMING POOL. Any structure intended for swimming or recreational bathing that contains water over 24 inches (610 mm) deep. This includes in-ground, above-ground and on-ground swimming pools, hot tubs and spas.

SWIMMING POOL, INDOOR. A swimming pool which is totally contained within a structure and surrounded on all four sides by the walls of the enclosing structure.

SWIMMING POOL, OUTDOOR. Any swimming pool which is not an indoor pool.

SECTION AG103
SWIMMING POOLS

AG103.1 In-ground pools. In-ground pools shall be designed and constructed in conformance with ANSI/NSPI-5 as listed in Section AG108.

AG103.2 Above-ground and on-ground pools. Above-ground and on-ground pools shall be designed and constructed in conformance with ANSI/NSPI-4 as listed in Section AG108.

AG103.3 Pools in flood hazard areas. In flood hazard areas established by Table R301.2(1), pools in coastal high hazard areas shall be designed and constructed in conformance with ASCE 24.

SECTION AG104
SPAS AND HOT TUBS

AG104.1 Permanently installed spas and hot tubs. Permanently installed spas and hot tubs shall be designed and constructed in conformance with ANSI/NSPI-3 as listed in Section AG108.

AG104.2 Portable spas and hot tubs. Portable spas and hot tubs shall be designed and constructed in conformance with ANSI/NSPI-6 as listed in Section AG108.

SECTION AG105
BARRIER REQUIREMENTS

AG105.1 Application. The provisions of this chapter shall control the design of barriers for residential swimming pools, spas and hot tubs. These design controls are intended to provide protection against potential drownings and near-drownings by restricting access to swimming pools, spas and hot tubs.

AG105.2 Outdoor swimming pool. An outdoor swimming pool, including an in-ground, above-ground or on-ground pool, hot tub or spa shall be surrounded by a barrier which shall comply with the following:

1. The top of the barrier shall be at least 48 inches (1219 mm) above *grade* measured on the side of the barrier which faces away from the swimming pool. The maximum vertical clearance between grade and the bottom of the barrier shall be 2 inches (51 mm) measured on the side of the barrier which faces away from the swimming pool. Where the top of the pool structure is above grade, such as an above-ground pool, the barrier may be at ground level, such as the pool structure, or mounted on top of the pool structure. Where the barrier is mounted on top of the pool structure, the maximum vertical clearance between the top of the pool structure and the bottom of the barrier shall be 4 inches (102 mm).

2. Openings in the barrier shall not allow passage of a 4-inch-diameter (102 mm) sphere.

3. Solid barriers which do not have openings, such as a masonry or stone wall, shall not contain indentations or protrusions except for normal construction tolerances and tooled masonry joints.

4. Where the barrier is composed of horizontal and vertical members and the distance between the tops of the horizontal members is less than 45 inches (1143 mm), the horizontal members shall be located on the swimming pool side of the fence. Spacing between vertical members shall not exceed $1^3/_4$ inches (44 mm) in width. Where there are decorative cutouts within vertical members, spacing within the cutouts shall not exceed $1^3/_4$ inches (44 mm) in width.

5. Where the barrier is composed of horizontal and vertical members and the distance between the tops of the horizontal members is 45 inches (1143 mm) or more, spacing between vertical members shall not exceed 4 inches (102 mm). Where there are decorative cutouts within vertical members, spacing within the cutouts shall not exceed $1^3/_4$ inches (44 mm) in width.

6. Maximum mesh size for chain link fences shall be a $2^1/_4$-inch (57 mm) square unless the fence has slats fastened at the top or the bottom which reduce the openings to not more than $1^3/_4$ inches (44 mm).

7. Where the barrier is composed of diagonal members, such as a lattice fence, the maximum opening formed by the diagonal members shall not be more than $1^3/_4$ inches (44 mm).

8. Access gates shall comply with the requirements of Section AG105.2, Items 1 through 7, and shall be equipped to accommodate a locking device. Pedestrian access gates shall open outward away from the pool and shall be self-closing and have a self-latching device. Gates other than pedestrian access gates shall have a self-latching device. Where the release mechanism of the self-latching device is located less than 54 inches (1372 mm) from the bottom of the gate, the release mechanism and openings shall comply with the following:

8.1. The release mechanism shall be located on the pool side of the gate at least 3 inches (76 mm) below the top of the gate; and

8.2. The gate and barrier shall have no opening larger than $^1/_2$ inch (12.7 mm) within 18 inches (457 mm) of the release mechanism.

9. Where a wall of a *dwelling* serves as part of the barrier, one of the following conditions shall be met:

9.1. The pool shall be equipped with a powered safety cover in compliance with ASTM F 1346; or

9.2. Doors with direct access to the pool through that wall shall be equipped with an alarm which produces an audible warning when the door and/or its screen, if present, are opened. The alarm shall be listed and *labeled* in accordance with UL 2017. The deactivation switch(es) shall be located at least 54 inches (1372 mm) above the threshold of the door; or

9.3. Other means of protection, such as self-closing doors with self-latching devices, which are *approved* by the governing body, shall be acceptable as long as the degree of protection afforded is not less than the protection afforded by Item 9.1 or 9.2 described above.

10. Where an above-ground pool structure is used as a barrier or where the barrier is mounted on top of the pool structure, and the means of access is a ladder or steps:

10.1. The ladder or steps shall be capable of being secured, locked or removed to prevent access; or

10.2. The ladder or steps shall be surrounded by a barrier which meets the requirements of Section AG105.2, Items 1 through 9. When the ladder or steps are secured, locked or removed, any opening created shall not allow the passage of a 4-inch-diameter (102 mm) sphere.

AG105.3 Indoor swimming pool. Walls surrounding an indoor swimming pool shall comply with Section AG105.2, Item 9.

AG105.4 Prohibited locations. Barriers shall be located to prohibit permanent structures, *equipment* or similar objects from being used to climb them.

AG105.5 Barrier exceptions. Spas or hot tubs with a safety cover which complies with ASTM F 1346, as listed in Section AG107, shall be exempt from the provisions of this appendix.

SECTION AG106
ENTRAPMENT PROTECTION FOR SWIMMING POOL AND SPA SUCTION OUTLETS

AG106.1 General. Suction outlets shall be designed and installed in accordance with ANSI/APSP-7.

SECTION AG107
ABBREVIATIONS

AG107.1 General.

ANSI—American National Standards Institute
11 West 42nd Street
New York, NY 10036

APSP—Association of Pool and Spa Professionals
NSPI—National Spa and Pool Institute
2111 Eisenhower Avenue
Alexandria, VA 22314

ASCE—American Society of Civil Engineers
1801 Alexander Bell Drive
Reston, VA 98411-0700

ASTM—ASTM International
100 Barr Harbor Drive,
West Conshohocken, PA 19428

UL—Underwriters Laboratories, Inc.
333 Pfingsten Road
Northbrook, IL 60062-2096

SECTION AG108
STANDARDS

AG108.1 General.

ANSI/NSPI	
ANSI/NSPI-3-99 Standard for Permanently Installed Residential Spas	AG104.1
ANSI/NSPI-4-99 Standard for Above-ground/On-ground Residential Swimming Pools	AG103.2
ANSI/NSPI-5-2003 Standard for Residential In-ground Swimming Pools	AG103.1
ANSI/NSPI-6-99 Standard for Residential Portable Spas	AG104.2
ANSI/APSP	
ANSI/APSP-7-06 Standard for Suction Entrapment avoidance in Swimming Pools, Wading Pools, Spas, Hot Tubs and Catch Basins	AG106.1
ASCE	
ASCE/SEI-24-05 Flood Resistant Design and Construction	AG103.3
ASTM	
ASTM F 1346-91 (2003) Performance Specification for Safety Covers and Labeling Requirements for All Covers for Swimming Pools, Spas and Hot Tubs	AG105.2, AG105.5
UL	
UL 2017-2000 Standard for General-purpose Signaling Devices and Systems-with Revisions through June 2004	AG105.2

JEFFREY FETTE
Construction Official

Cynthia Petersen
Technical Assistant

(201) 391-5732
Fax: (201) 391-1312

BOROUGH OF MONTVALE
Building Department – Code Enforcement
12 Mercedes Drive, Montvale, NJ 07645
www.montvale.org

Pool Fence Requirements

Private swimming pools must be surrounded by a barrier, such as a fence or wall. The barrier must meet the following requirements.

- The top of the barrier shall be at least 48 inches above finished ground level measured on the side of the barrier, which faces away from the swimming pool. The maximum vertical clearance between finished ground level and the bottom of the barrier shall be 2 inches measured on the side of the barrier, which faces away from the swimming pool.

- Solid barriers shall not contain indentations or protrusions except for normal construction tolerances and tooled masonry joints.

Fences with horizontal rails less than 45" apart

Where the barrier is composed of horizontal and vertical members and the distance between the tops of the horizontal members is less than 45 inches, the horizontal members shall be located on the swimming pool side of the fence. Spacing between vertical members shall not exceed 1-¾ inches in width. Decorative cutouts shall not exceed 1-¾ inches in width.

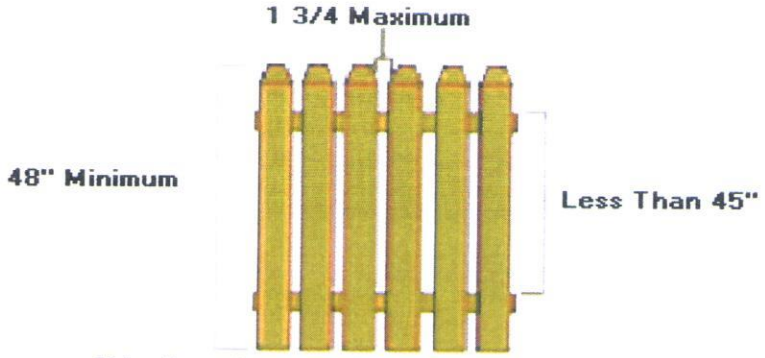

If horinontial planks are less than 45" apart the vertical spacing can not be more than 1 3/4"

Fences with horizontal rails more than 45"aparts

Where the barrier is composed of horizontal and vertical members and the distance between the tops of the horizontal members is 45 inches or more, spacing between vertical members shall not exceed 4 inches. Decorative cutouts shall not exceed 1-¾ inches in width.

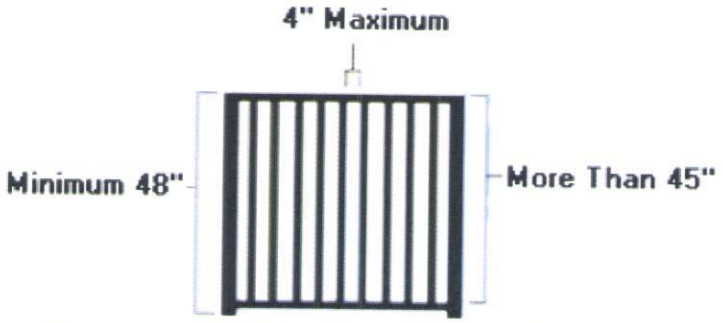

If horizontal rails are more than 45" apart the vertical spaces cannot be more than 4" apart

Chain link Fence Mesh Size Limit

Maximum mesh size for chain link fences shall be a 1 ¼-inch square unless the fence is provided with slats fastened at the top or the bottom which reduce the openings to not more than 1 ¾-inches. (Figure 3)

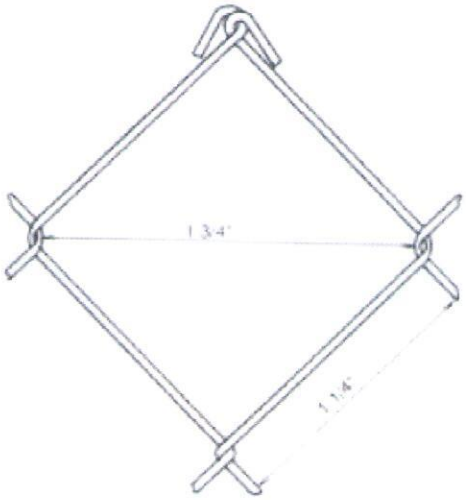

Important: The maximum mesh size for a pool fence is smaller than the standard chain link mesh

Gate Swing

Gates shall comply with the requirements of a fence for height, picket spacing or chain link mess size and shall be equipped to accommodate a locking device. Pedestrian access gates shall open outwards away from the pool and shall be self-closing and have a self-latching device. Gates must swing out only so that even if the gate is not completely latched, a young child pushing on the gate in order to enter the pool area will at least close the gate and may actually engage the latch.

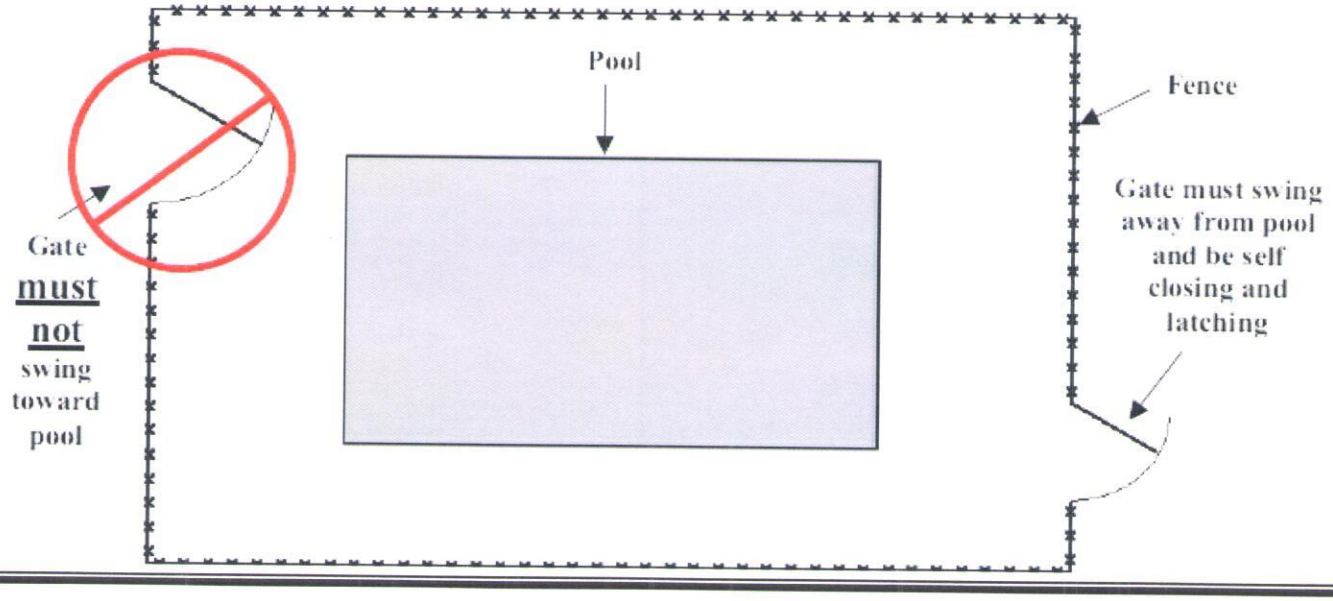

48" high gates with latches mounted less than 54" from the ground

If the latch is mounted less than 54" from grade, it must be mounted on the **pool** side of the gate, a minimum of 3" down from the top of the gate so you must reach over the fence to unlatch and have no space greater than ½" within 18" of the latch so a child can not reach through the fence to unlatch it.

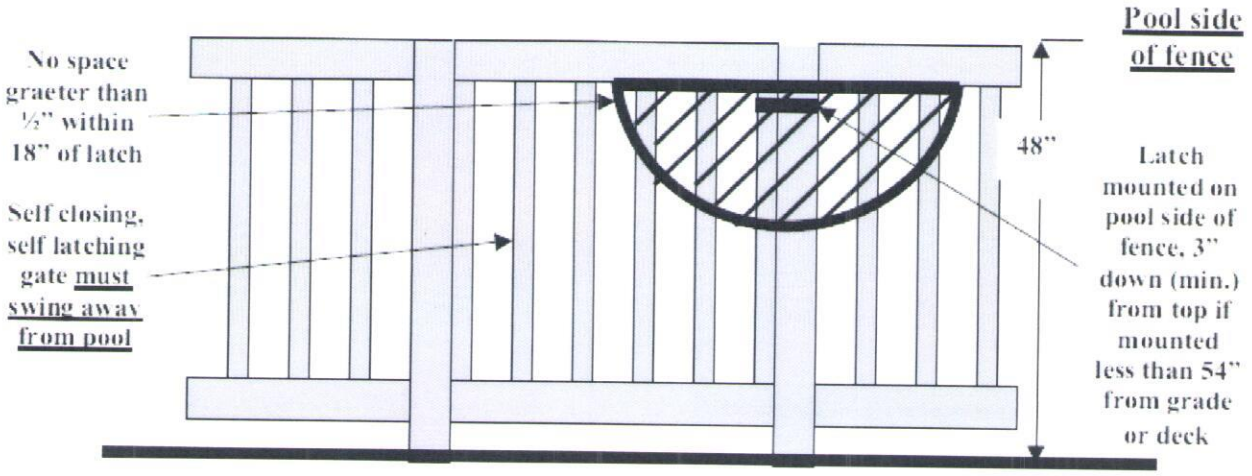

48" high gates with the latch mounted above the top of the gate.

Several manufactures make latches that can be mounted on a 48" high gate and have the operating mechanism above the top of the gate. The operating mechanism must be mounted at least **54**" above the bottom of the gate.

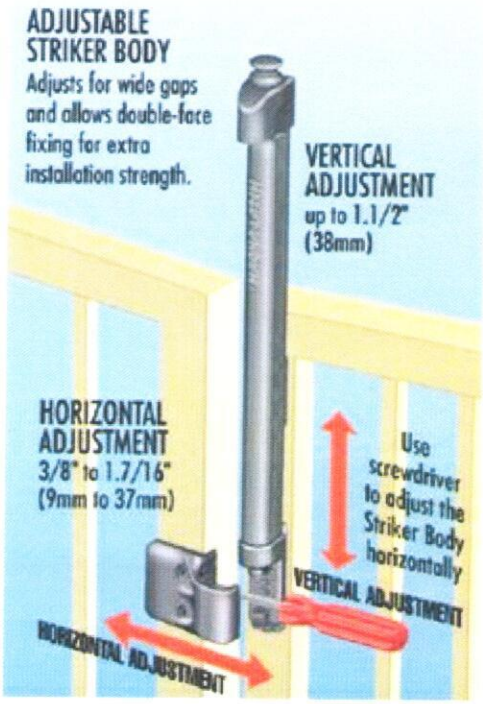

Gates more than 48" high

Gates that are more than 48" high must have the latch mounted at least 54" above the bottom of the gate.

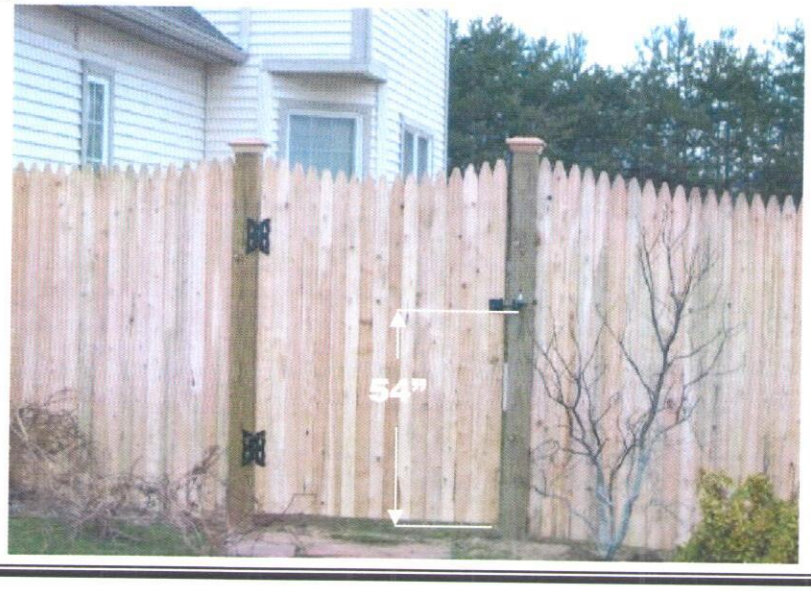

Above ground pools

Barrier are required for above ground pools, **a removable ladder is not an acceptable barrier** for an above ground pool. The barrier may be a compliant fence that surrounds the entire pool or yard. Pools that have a wall that is at least 48" do not require a fence around the entire pool and may have a fence just around the ladder area or a ladder with a built in self closing latching gate.

Above ground pools with walls at least 48" above grade

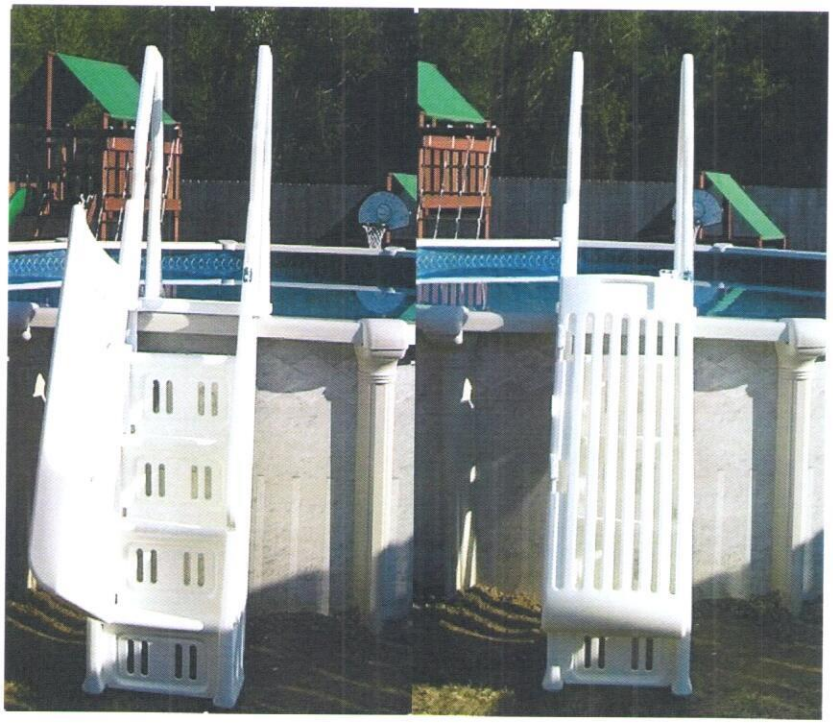

Ladder with built-in gate

Fence around ladder area

Above ground pools on sloped site

Where the walls of an above-ground pool are used as the barrier, are on a sloped site, which will make a portion of the top of the pool structure to be less than 48" to grade, a minimum of 3-foot level surface around the portion of the pool structure that is less than 48" to grade should be provided. The level surface should be measured away from the pool wall to the excavation edge and should be tapered away from the pool at a minimum of 45- degree angle for a distance of one half the level surface.

Above ground pools on sloped site where the pool wall is used as the barrier

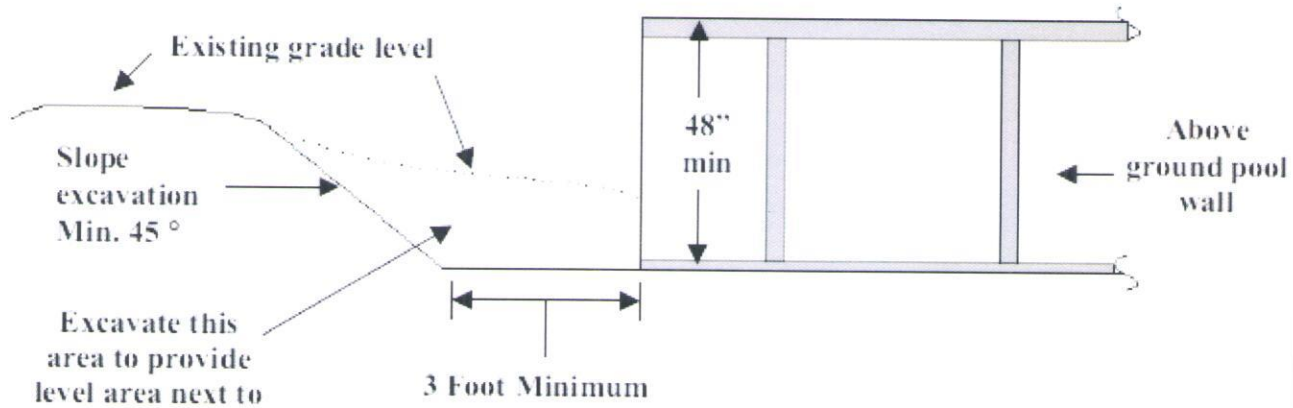

Figure 10